This data sheet interacts with
HDS2 Catalogue
26 to 29 32-33 & 37

HepcoMotion®

No. 9 HDS2 Cap Wiper Options

This document is to aid with the specification of cap wiper scraper plates and threaded inserts when combined with HDS2 carriage assemblies, and should be read in conjunction with 32, 33 & 37 of the HDS2 catalogue.

Both standard and rack driven carriages 26-29 can be specified with outboard scrapers within the part number, which can be achieved by adding CW4S to the carriage part number; for example.

AU 64 25C CW4S

This will provide a carriage assembly complete with cap wipers and outboard scraper plates, as shown below.

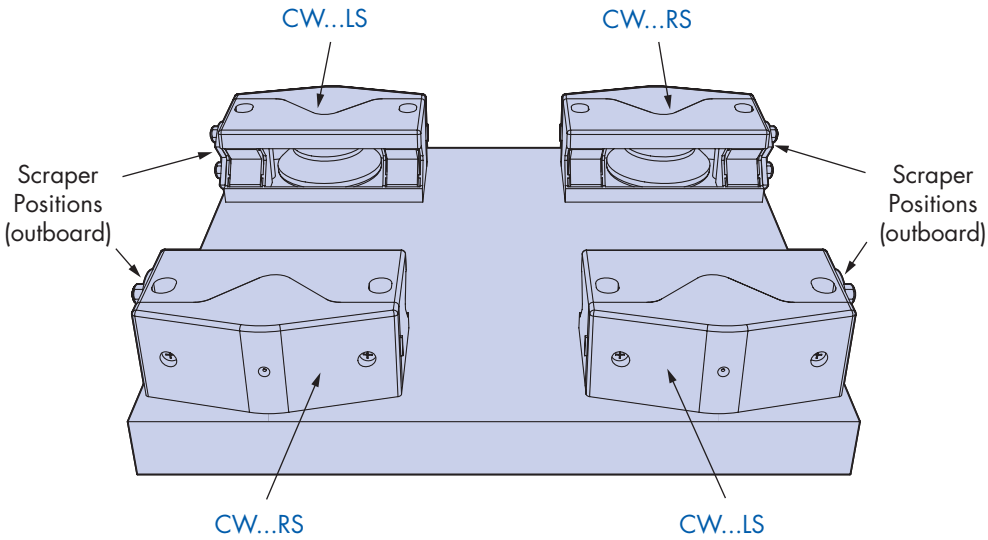

If the cap wipers were ordered separately for the carriage shown above, the quantity and part numbers would be:

2 x CW64LS
2 x CW64RS

Scraper plates may be ordered for either, or both ends of a cap wiper, but for most applications it is usual to require them only at the end facing outboard in a system (see drawing above). This is the default position for all standard carriages available within the HDS2 catalogue and is designated by the suffix ...4S.

For applications where debris may also be present in the area between cap wipers, customers may specify scraper plates to be fitted at both ends of each cap wiper (outboard and inboard facing scraper plates). In this case the suffix 4S should be replaced by 8S.

Example:

AU 64 25C CW8S

No. 9 HDS2 Cap Wiper Options

Cap wipers can also be specified with threaded inserts to enable connection to a centralised lubrication system. A number of insert thread sizes and a variety of lubrication positions are available for each cap wiper. These can be specified as shown on page 37.

The drawing below is an example showing a carriage with cap wipers fitted with outboard scraper plates and M5 threaded inserts fitted opposite on the inboard side of the cap wiper.

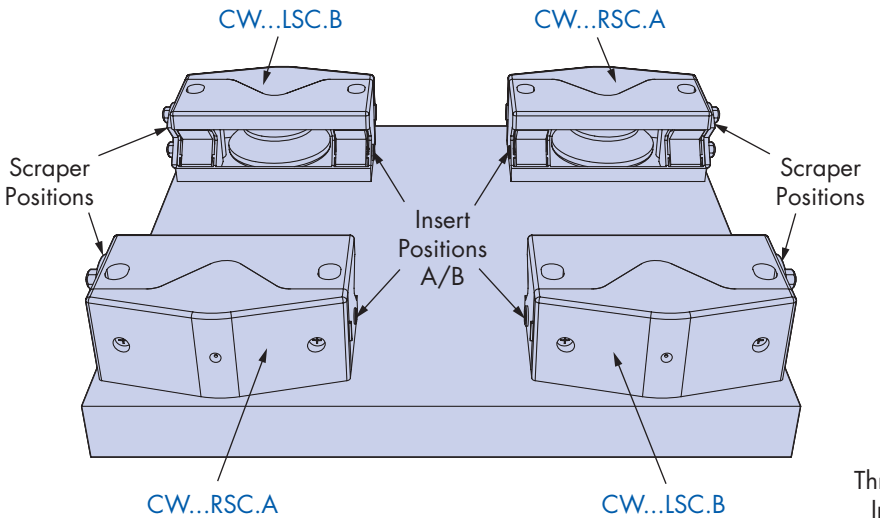

Note:

Part numbers shown in blue indicate individual cap wiper designations and are shown for cross reference purposes only.

To specify this variant of a standard carriage, the suffix C5 A/B should be added to the standard part number. C5 = M5 inserts. A/B = insert positions. Please see page 37 for details and options.

Example:

AU 64 25C CW4S C5 A/B

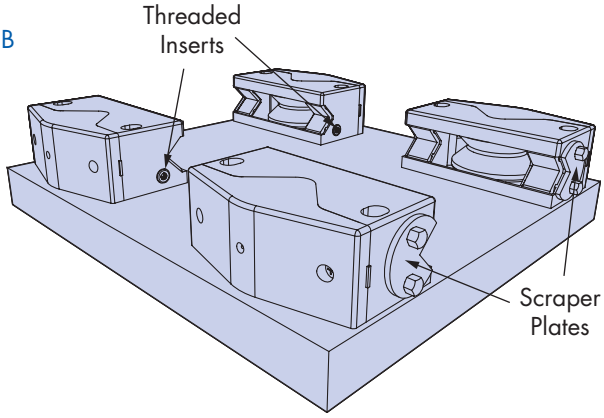

Customers requiring centralised lubrication facility for cap wipers fitted with scraper plates also on the inboard side, may choose to have inserts fitted to the sides of the cap wiper in positions C/D as insert positions A/B in the ends will be obstructed. This option is not available on sizes AU64 & AU95 carriages, as insert positions C & D are not compatiable with small series bearing cap wipers CW64 & CW95.

Example:

AU128 33N CW8S C5 C/D

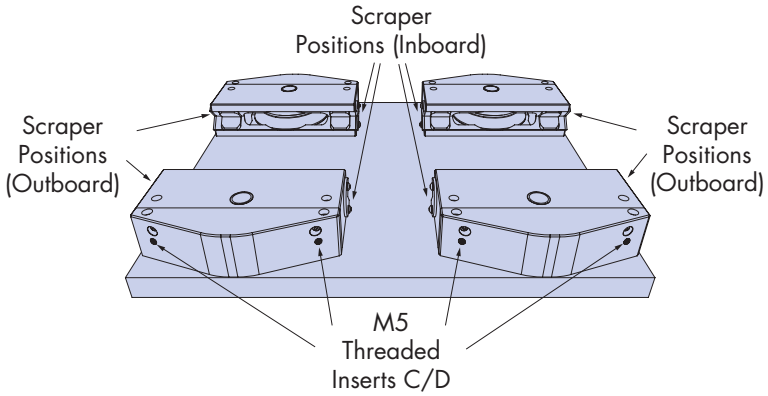

HepcoMotion®, Lower Moor Business Park,
Tiverton Way, Tiverton, Devon, England EX16 6TG
Tel: +44 (0) 1884 257000
Fax: +44 (0) 1884 243500
E-mail: sales@hepcomotion.com

INVESTOR IN PEOPLE
ISO 9001
www.HepcoMotion.com